www.htp-dtr.pl

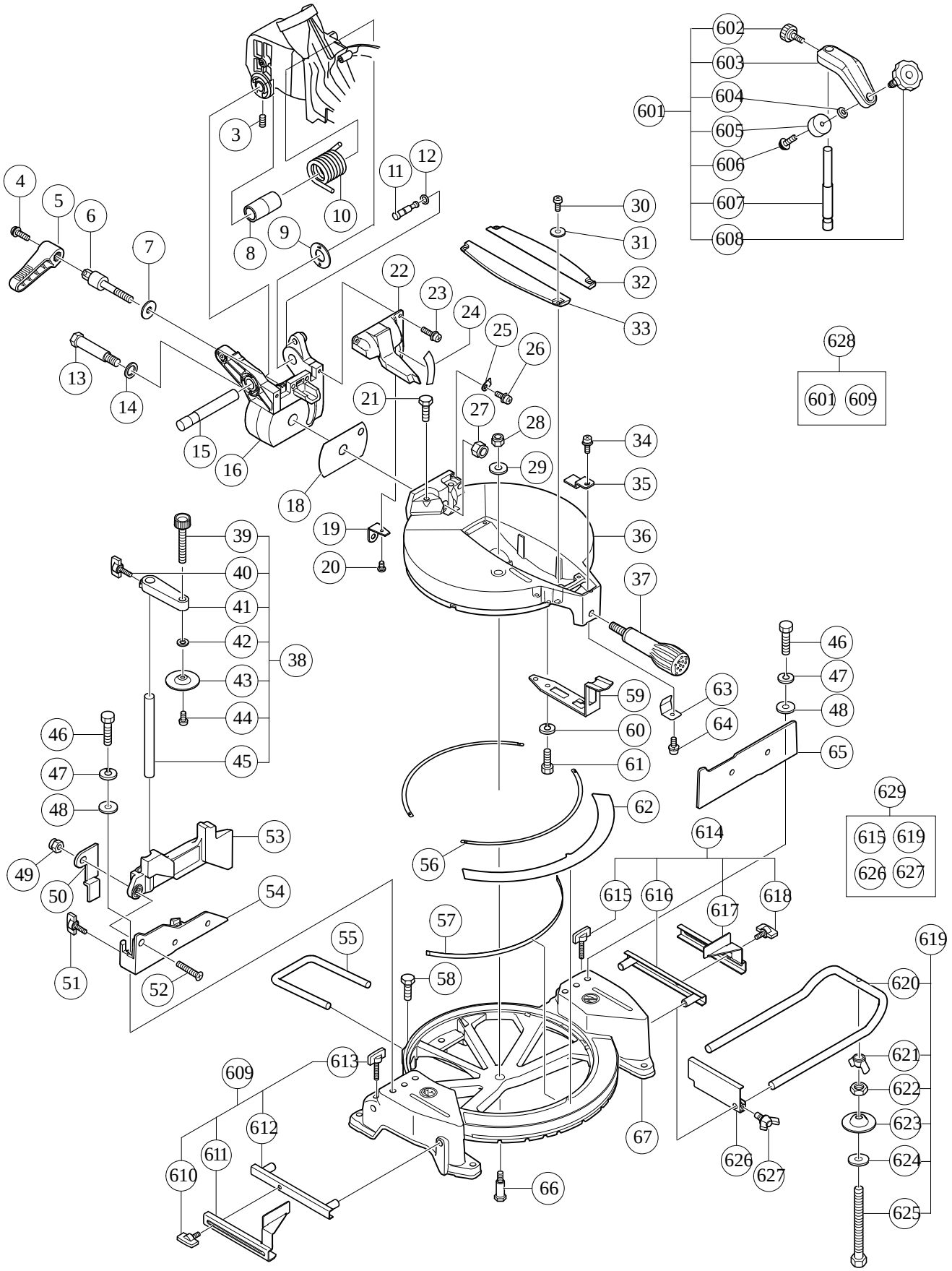

Rev.1

形　　名
C10FCE2(1/2)

www.htp-dtr.pl

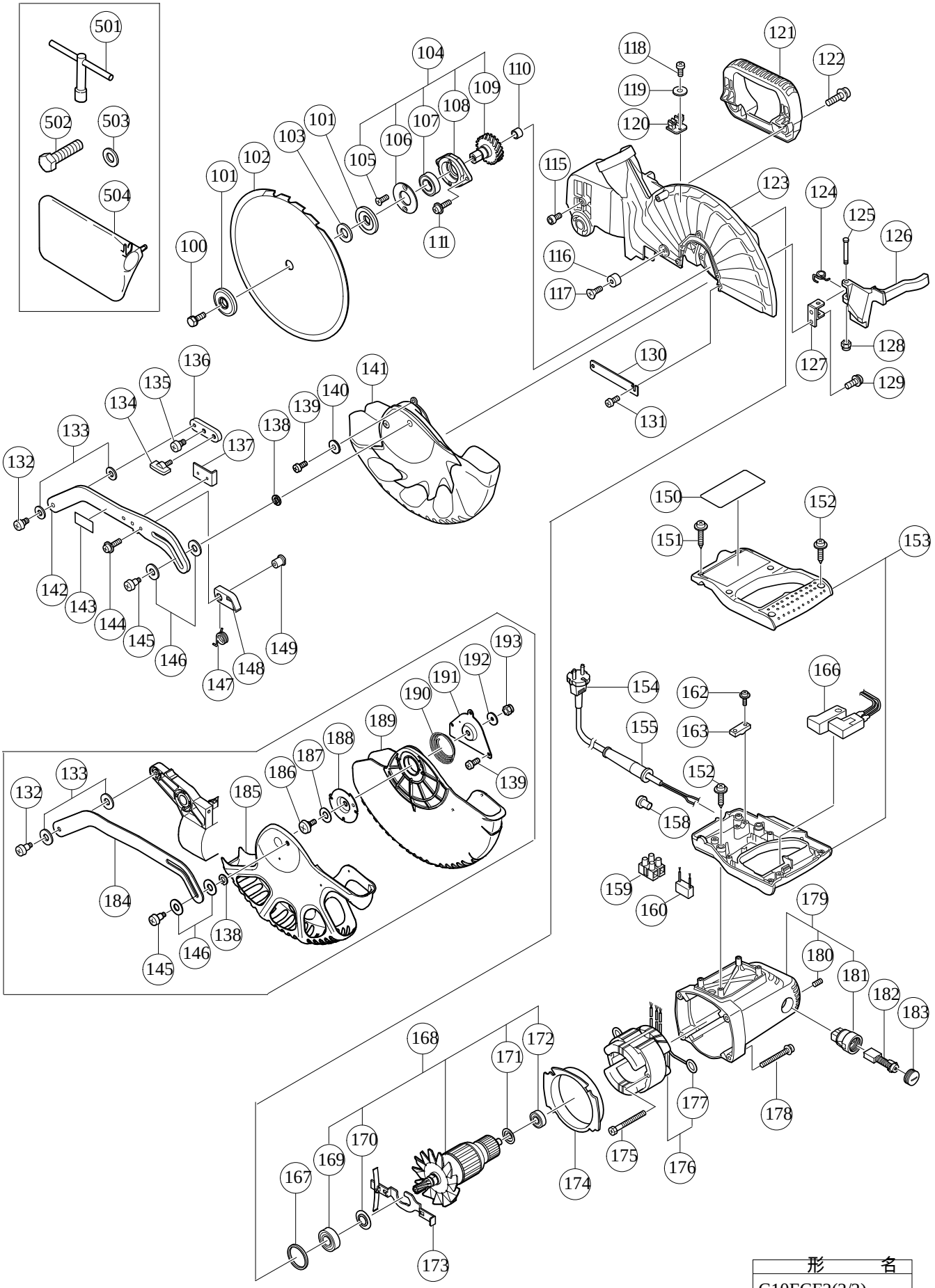

形　　名
C10FCE2(2/2)

Rev.2

www.htp-dtr.pl

PARTS

ITEM No.	CODE No.	DESCRIPTION	USED No.	REMARKS
3	307956	SEAL LOCK HEX. SOCKET SET SCREW M6X10	1	
4	323208	MACHINE SCREW (W/WASHERS) M6X20 (BLACK)	1	
5	322935	CLAMP LEVER	1	
6	326706	BOLT (LEFT HAND) M10	1	
7	318934	SPECIAL WASHER	1	
8	322889	SLEEVE	1	
9	322965	LINER (D)	1	
10	322890	SPRING	1	
11	302518	STOPPER PIN ASS'Y	1	INCLUD.12
12	984528	O-RING (P-6)	1	
13	322933	SHAFT (D)	1	
14	322934	WASHER M16	1	
15	322888	SHAFT (C)	1	
16	322932	HINGE	1	
18	322937	LINER (B)	1	
19	322963	DUST GUIDE HOLDER	1	
20	949215	MACHINE SCREW M4X8 (10 PCS.)	1	
21	303409	NYLOCK BOLT M8X25	2	
22	322891	DUST GUIDE ASS'Y	1	INCLUD.19,20,24
23	987512	MACHINE SCREW (W/SP. WASHER) M5X16	2	
24	322892	SCALE (B)	1	
25	322893	INDICATOR (B)	1	
26	304043	MACHINE SCREW (W/WASHERS) M4X10 (BLACK)	1	
27	680418	NYLON NUT M12	1	
28	975348	NYLON NUT M8	1	
29	318929	WASHER (F)	1	
30	949217	MACHINE SCREW M4X12 (10 PCS.)	4	
31	949429	BOLT WASHER M4 (10 PCS.)	4	
32	322929	TABLE INSERT (A)	1	
33	322930	TABLE INSERT (B)	1	
34	304043	MACHINE SCREW (W/WASHERS) M4X10 (BLACK)	1	
35	322904	INDICATOR (A)	1	
36	326695	TURN TABLE	1	
37	322898	SIDE HANDLE	1	
38	322952	VISE ASS'Y	1	INCLUD.39-45
39	302522	KNOB BOLT M10X66	1	
40	301806	WING BOLT M6X15	1	
41		SCREW HOLDER	1	
42	949432	BOLT WASHER M6 (10 PCS.)	1	
43	302532	VISE PLATE	1	
44	949216	MACHINE SCREW M4X10 (10 PCS.)	1	
45	322954	VISE SHAFT	1	
46	949678	BOLT M8X35 (10 PCS.)	4	
47	949457	SPRING WASHER M8 (10 PCS.)	4	
48	949433	BOLT WASHER M8 (10 PCS.)	4	
49	963837	NYLON NUT M6	1	
50	326711	PLATE (A)	1	
51	301806	WING BOLT M6X15	1	
52	949342	FLAT HD. SCREW M6X25 (10 PCS.)	1	
53	326704	SUB FENCE (B)	1	
54	326698	FENCE (B)	1	
55	326705	HOLDER	1	

*:ALTERNATIVE PARTS

www.htp-dtr.pl

PARTS

ITEM No.	CODE No.	DESCRIPTION	USED No.	REMARKS
56	322901	LINER (A)	2	
57	322964	LINER (C)	1	
58	949611	BOLT M6X12 (10 PCS.)	1	
59	322903	SPRING PLATE	1	
60	949457	SPRING WASHER M8 (10 PCS.)	2	
61	949655	HEX. SOCKET HD. BOLT M8X16 (10 PCS.)	2	
62	326826	SCALE (A)	1	
63	326696	SPACER (A)	1	
64	317200	MACHINE SCREW (W/WASHERS) M4X8 (BLACK)	1	
65	326697	FENCE (A)	1	
66	322902	SHAFT (B)	1	
67	326694	BASE ASS'Y	1	INCLUD.62
100	998335	BOLT (LEFT HAND) W/WASHER M7X17.5	1	
* 101	308789	WASHER (D)	2	EXCEPT FOR EUROPE,CHN
* 101	318961	WASHER (A)	1	FOR EUROPE,CHN
* 101	318962	WASHER (B)	1	FOR EUROPE,CHN
* 102	319107	TCT SAW BLADE 255MM-D30 HOLE-NT30	1	
* 102	319106	TCT SAW BLADE 255MM-D25.4 HOLE-NT24	1	
* 102	318963	TCT SAW BLADE 255MM-D15.88 HOLE-NT24	1	
* 102	318964	TCT SAW BLADE 255MM-D25.4 HOLE-NT100	1	
* 103	974663Z	COLLAR (A) FOR D30 HOLE	1	FOR EUROPE
* 103	976819	COLLAR (B) FOR D25.4 HOLE	1	FOR AUS,INA,MAL,SIN,SYR,THA,CHN
104	323133	SPINDLE ASS'Y	1	INCLUD.105-109
105	990430	SEAL LOCK FLAT HD. SCREW M4X10	2	
106	322919	BEARING COVER	1	
107	6003VV	BALL BEARING 6003VVCMPS2L	1	
108	322918	BEARING HOLDER	1	
109	322917	SPINDLE AND GEAR SET	1	
110	982027	NEEDLE BEARING (HK1010)	1	
111	987512	MACHINE SCREW (W/SP. WASHER) M5X16	2	
115	949819	HEX. SOCKET HD. BOLT M5X10 (10 PCS.)	1	
116	961729	CUSHION	1	
117	949340	FLAT HD. SCREW M6X16 (10 PCS.)	1	
118	949217	MACHINE SCREW M4X12 (10 PCS.)	1	
119	949429	BOLT WASHER M4 (10 PCS.)	1	
120	322920	HOOK	1	
121	326708	HANDLE	1	
122	323208	MACHINE SCREW (W/WASHERS) M6X20 (BLACK)	2	
* 123	326701	GEAR CASE	1	INCLUD.110
* 123	326702	GEAR CASE	1	INCLUD.110 FOR EUROPE
124	323987	LEVER SPRING	1	FOR EUROPE
125	323990	LEVER SHAFT	1	FOR EUROPE
126	323979	LOCK LEVER (C)	1	FOR EUROPE
127	323982	LEVER HOLDER	1	FOR EUROPE
128	877371	NYLON NUT M5	1	FOR EUROPE
129	949236	MACHINE SCREW M5X10 (10 PCS.)	2	FOR EUROPE
130	322951	SPINDLE COVER	1	FOR EUROPE,USA,CAN,AUS,MAL
131	949215	MACHINE SCREW M4X8 (10 PCS.)	2	FOR EUROPE,USA,CAN,AUS,MAL
132	322950	SPECIAL SCREW M6	1	
133	322948	WASHER M7	2	
134	301806	WING BOLT M6X15	1	FOR EUROPE
135	322950	SPECIAL SCREW M6	1	FOR EUROPE

*:ALTERNATIVE PARTS

www.htp-dtr.pl

PARTS

ITEM No.	CODE No.	DESCRIPTION	USED No.	REMARKS
136	323986	TURN PLATE	1	FOR EUROPE
137	323985	STOP PLATE	1	FOR EUROPE
138	949454	SPRING WASHER M5 (10 PCS.)	1	
139	949215	MACHINE SCREW M4X8 (10 PCS.)	3	
140	949429	BOLT WASHER M4 (10 PCS.)	3	
141	326707	PROTECTIVE COVER	1	
142	323980	LINK (A) ASS'Y	1	INCLUD.132,133,136,137,143,144,147-149
* 142	323980			FOR EUROPE
143		CAUTION LABEL(F)	1	
				FOR EUROPE
144	935196	MACHINE SCREW (W/WASHERS) M4X12 (BLACK)	3	FOR EUROPE
145	322947	SPECIAL SCREW (C) M5	1	
146	322938	WASHER M10	2	
147	323984	RETURN SPRING (A)	1	FOR EUROPE
148	323989	RETURN PLATE	1	FOR EUROPE
149	323988	RETURN SHAFT	1	FOR EUROPE
150		NAME PLATE	1	
151	307028	TAPPING SCREW (W/FLANGE) D4X25 (BLACK)	2	
152	301653	TAPPING SCREW (W/FLANGE) D4X20 (BLACK)	6	
153	326703	SWITCH HANDLE	1	
* 154	500234Z	CORD	1	
* 154	500468Z	CORD	1	FOR THA
* 154	500447Z	CORD	1	FOR SYR
* 154	500423Z	CORD	1	FOR MAL,SIN
* 154	500453Z	CORD	1	FOR USA,CAN
* 154	500435Z	CORD	1	FOR GBR (230V)
* 154	500461Z	CORD	1	FOR GBR (110V)
* 154	500439Z	CORD	1	FOR AUS
* 154	500456Z	CORD	1	FOR CHN
155	940778	CORD ARMOR D10.7	1	
158	959141	CONNECTOR 50092 (10 PCS.)	2	FOR USA,CAN
159	958308Z	PILLAR TERMINAL (A)	1	EXCEPT FOR USA,CAN
* 160	326709	NOISE SUPPRESSOR	1	FOR AUS.AUT,EUROPE,INA,GBR (230V),TUR
* 160	326710	NOISE SUPPRESSOR	1	FOR GBR (110V)
162	984750	TAPPING SCREW (W/FLANGE) D4X16	2	
163	937631	CORD CLIP	1	
* 166	326700	SWITCH (3P FASTON TYPE) W/O LOCK	1	
* 166	326699	SWITCH (3P FASTON TYPE) W/O LOCK	1	FOR USA,CAN
167	303792	RUBBER RING	1	
* 168	360656U	ARMATURE ASS'Y 110V-120V	1	INCLUD.169-172
* 168	360695E	ARMATURE ASS'Y 220V-230V	1	INCLUD.169-172
* 168	360695F	ARMATURE ASS'Y 240V	1	INCLUD.169-172
169	6202VV	BALL BEARING 6202VVCMPS2L	1	
170	980700	DUST WASHER (B)	1	
171	302428	WASHER (A)	1	
172	6000VV	BALL BEARING 6000VVCMPS2L	1	
173	322916	LOCK LEVER	1	
174	322915	FAN GUIDE	1	
175	953121	HEX. HD. TAPPING SCREW D5X50	2	
* 176	340686D	STATOR ASS'Y 110V	1	INCLUD.177
* 176	340686C	STATOR ASS'Y 120V	1	INCLUD.177
* 176	340687E	STATOR ASS'Y (B) 220V-230V	1	INCLUD.177

*:ALTERNATIVE PARTS

www.htp-dtr.pl

PARTS

ITEM No.	CODE No.	DESCRIPTION	USED No.	REMARKS
* 176	340686E	STATOR ASS'Y 220V	1	INCLUD.177 FOR CHN
* 176	340687F	STATOR ASS'Y (B) 240V	1	INCLUD.177
177	937623	BRUSH TERMINAL	2	
178	322123	MACHINE SCREW (W/WASHERS) M5X40 (BLACK)	4	
179	322914	HOUSING ASS'Y	1	INCLUD.180,181
180	938477	HEX. SOCKET SET SCREW M5X8	2	
181	938241	BRUSH HOLDER	2	
* 182	999038	CARBON BRUSH (1 PAIR)	2	FOR 110V-120V
* 182	999065	CARBON BRUSH (1 PAIR)	2	FOR 220V-240V
183	945161	BRUSH CAP	2	
184	322949	LINK	1	
185	322940	PROTECTIVE COVER (B)	1	FOR USA,CAN,MEX
186	322943	SPECIAL SCREW (B) M5	1	FOR USA,CAN,MEX
187	322944	WASHER M8	1	FOR USA,CAN,MEX
188	322942	COVER PLATE (B)	1	FOR USA,CAN,MEX
189	322939	PROTECTIVE COVER (A)	1	FOR USA,CAN,MEX
190	322946	RETURN SPRING	1	FOR USA,CAN,MEX
191	322941	COVER PLATE (A)	1	FOR USA,CAN,MEX
192	322945	WASHER M5	1	FOR USA,CAN,MEX
193	877371	NYLON NUT M5	1	FOR USA,CAN,MEX
		STANDARD ACCESSORIES		
		OPTIONAL ACCESSORIES		

STANDARD ACCESSORIES

ITEM No.	CODE No.	DESCRIPTION	USED No.	REMARKS
501	940543	BOX WRENCH 10MM	1	
502	949695	BOLT M10X35 (10 PCS.)	1	
503	974663Z	COLLAR (A) FOR D30 HOLE	1	FOR AUS
504	322955	DUST BAG (BLACK)	1	

OPTIONAL ACCESSORIES

ITEM No.	CODE No.	DESCRIPTION	USED No.	REMARKS
601	322957	VISE (B) ASS'Y	1	INCLUD.602-608
602	998836	KNOB BOLT M6X11	1	
603		SCREW HOLDER (B)	1	
604	306985	WASHER (H)	1	
605	964851	BASE RUBBER	1	
606	304043	MACHINE SCREW (W/WASHERS) M4X10 (BLACK)	1	
607	318967	VISE SHAFT	1	
608	321551	KNOB BOLT M10X54	1	
609	322713	CROWN MOLDING STOPPER (L) ASS'Y	1	INCLUD.610-613
610	301806	WING BOLT M6X15	1	
611		CROWN MOLDING STOPPER (L)	1	
612	321390	CROWN MOLDING STOPPER HOLDER	1	
613	316030	WING BOLT M6X52	1	
614	322714	CROWN MOLDING STOPPER (R) ASS'Y	1	INCLUD.615-618
615	316030	WING BOLT M6X52	2	
616	321390	CROWN MOLDING STOPPER HOLDER	1	

*:ALTERNATIVE PARTS

www.htp-dtr.pl

OPTIONAL ACCESSORIES

ITEM No.	CODE No.	DESCRIPTION	USED No.	REMARKS
617		CROWN MOLDING STOPPER (R)	1	
618	301806	WING BOLT M6X15	1	
619	322956	HOLDER ASS'Y	1	INCLUD.620-625
620	321549	HOLDER	1	
621	949313	WING NUT M6 (10 PCS.)	1	
622	949556	NUT M6 (10 PCS.)	1	
623	322047	VISE PLATE	1	
624	949425	WASHER M6 (10 PCS.)	1	
625	323134	HIGH TENSION BOLT M6X80	1	
626	974561	STOPPER	1	
627	949404	WING BOLT M6X20 (10 PCS.)	1	
628	322712	CROWN MOLDING VISE ASS'Y	1	INCLUD.601,609
629	322710	GUIDE ASS'Y	1	INCLUD.615,619,626,627
630	976472	TCT SAW BLADE CROSS-CUT 255MM-D15.9 HOLE	1	FOR USA,CAN
631	319658	TCT SAW BLADE 255MM-D15.88 HOLE-NT100	1	FOR USA,CAN

*:ALTERNATIVE PARTS